Click to ORDER samples

AM3PW-Z

Encapsulated

The AM3PW-Z is a DC/DC converter that offers greater cost effectiveness due to material normalization and production automation also leading to improved reliability and performance. Offering an ultra-wide 4:1 input voltage range of 4.5 to 75VDC and an output voltage range from 3.3 to 15V & ±5 to ±15, this series will offer many benefits to your new system design.
This new series offers great operating temperatures, from -40°C to 80°C with full power up to 80°C. It also features an isolation of 1600VDC for improved reliability and system safety. Furthermore, a high MTBF of 820,000h, output short circuit protection (OSCP), under voltage lock-out come standard with the series.
The AM3PW-Z is suitable for gate driving, current sensing, IoT, instrumentation, industrial controls, communication and civil applications.

Features

- 4:1 Wide Input Range: 4.5VDC – 75VDC
- Operating Temp: -40 °C to +80 °C
- Low ripple & noise, up to 100mV(p-p) max
- Efficiency up to 84%
- Remote ON/OFF control
- Output short circuit protection, Under voltage lock-out protection
- Package: 8 Pin DIP package
- Regulated Output

RoHS

3yr Warranty

Summary

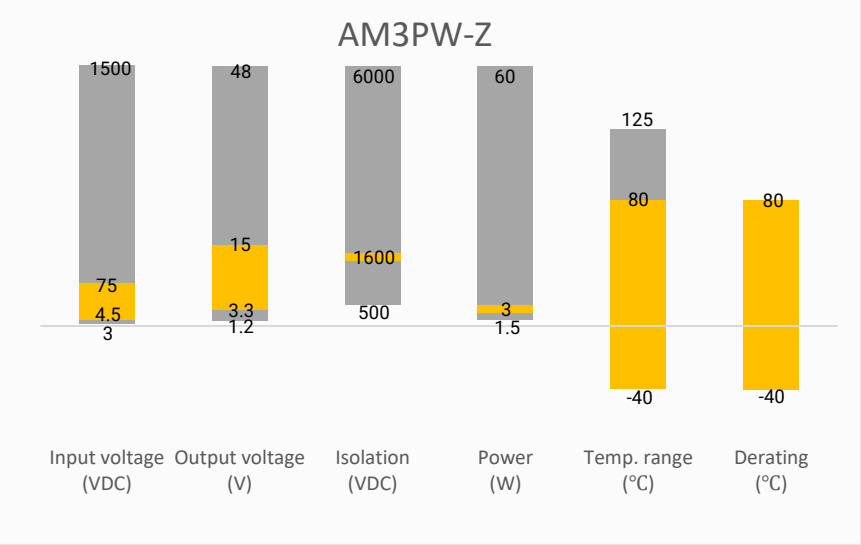

Training

Product Training Video (click to open)

Press Release

Coming Soon!

Application Notes

Applications

Power Grid

Industrial

Telecom

Instrumentation

Models & Specifications

Single Output

Model	Input Voltage (VDC)	Output Voltage (VDC)	Input Current Max (mA)		Output Current Max (mA)	Maximum Capacitive Load (µF)	Efficiency (%) Full Load
			No Load	Full Load			
AM3PW-1203SZ	12 (4.5 ~ 18)	3.3	30	257	700	3300	75
AM3PW-1205SZ	12 (4.5 ~ 18)	5	45	309	600	1680	81
AM3PW-1212SZ	12 (4.5 ~ 18)	12	55	301	250	470	83
AM3PW-1215SZ	12 (4.5 ~ 18)	15	60	301	200	330	83
AM3PW-2403SZ	24 (9 ~ 36)	3.3	25	127	700	3300	76
AM3PW-2405SZ	24 (9 ~ 36)	5	20	152	600	1680	82
AM3PW-2412SZ	24 (9 ~ 36)	12	30	149	250	470	84
AM3PW-2415SZ	24 (9 ~ 36)	15	35	149	200	330	84
AM3PW-4803SZ	48 (18 ~ 75)	3.3	10	65	700	3300	74
AM3PW-4805SZ	48 (18 ~ 75)	5	10	77	600	1680	81
AM3PW-4812SZ	48 (18 ~ 75)	12	15	77	250	470	81
AM3PW-4815SZ	48 (18 ~ 75)	15	15	76	200	330	82

Dual Output

Model	Input Voltage (VDC)	Output Voltage (VDC)	Input Current Max (mA)		Output Current Max (mA)	Maximum Capacitive Load (µF)	Efficiency (%) Full Load
			No Load	Full Load			
AM3PW-1205DZ	12 (4.5 ~ 18)	± 5	30	313	± 300	± 1000	80
AM3PW-1212DZ	12 (4.5 ~ 18)	± 12	55	305	± 125	± 220	82
AM3PW-1215DZ	12 (4.5 ~ 18)	± 15	60	301	± 100	± 220	83
AM3PW-2405DZ	24 (9 ~ 36)	± 5	25	154	± 300	± 1000	81
AM3PW-2412DZ	24 (9 ~ 36)	± 12	30	151	± 125	± 220	83
AM3PW-2415DZ	24 (9 ~ 36)	± 15	35	149	± 100	± 220	84
AM3PW-4805DZ	48 (18 ~ 75)	± 5	20	79	± 300	± 1000	79
AM3PW-4812DZ	48 (18 ~ 75)	± 12	20	78	± 125	± 220	80
AM3PW-4815DZ	48 (18 ~ 75)	± 15	25	78	± 100	± 220	80

Input Specification

Parameters	Conditions	Typical	Maximum	Units
Voltage range	See models table			VDC
Filter	Capacitor			
Absolute maximum rating	12V input models, 0.1 sec. max		25	VDC
	24V input models, 0.1 sec. max		50	VDC
	48V input models, 0.1 sec. max		100	VDC
Reflected ripple current	Nominal input voltage	20		mA pk-pk
Start-up time	Nominal input voltage	30		ms

Under voltage protection	12V input models	3.5		VDC
	24V input models	7.0		
	48V input models	15.5		VDC
Ctrl *	Module ON	Open or high impedance		
	Module OFF	2~4 mA input current (via 1K)		
	Input current when OFF		2.5	mA

Isolation Specification

Parameters	Conditions	Typical	Maximum	Units
Tested I/O voltage	60 sec	1600		VDC
Resistance		≧1000		MΩ
Capacitance		2000		pF

Output Specification

Parameters	Conditions		Typical	Maximum	Units
Voltage accuracy	0 ~ 100% load		± 1		%
Line regulation	Full load			± 0.2	%
Load regulation	0 ~ 100% load			± 1	%
Cross regulation (Dual output)	One load is 25% to 100%, the other load is 100% load		± 5		%
Short circuit protection	Continuous, Auto recovery				
Temperature coefficient	Full load		± 0.02		%/ °C
Ripple & Noise*	Single output models			150	mV pk-pk
	Dual output models			100	mV pk-pk
Transient recovery time	25% load step change		500		µS
Transient response deviation	25% load step change	Single 3.3V/5V output models		± 5	%
		Others		± 3	%

* Ripple and Noise are measured at 20MHz bandwidth by using a 0.1µF (M/C) and 10µF (E/C) parallel capacitor and typical input with full load

General Specifications

Parameters	Conditions	Typical	Maximum	Units
Switching frequency		100		KHz
Operating temperature	See derating graph	-40 to +80		°C
Storage temperature		-55 to +125		°C
Soldering temperature	1.5mm from case, 10 sec max		260	°C
Case temperature			100	°C
Cooling	Free air convection (30 ~ 65 LFM)			
Humidity	Non-condensing		95	% RH
Case material	Heat resistant black Plastic (flammability to UL 94V-0)			
Pin material	C5191R-H solder-coated			
Weight		3.6		g
Dimensions (L x W x H)		0.55 x 0.55 x 0.32 inches, 14.00 x 14.00 x 8.10mm		
MTBF	> 820 000 hrs (MIL-HDBK -217F, t=+25°C) / Full Load			

Safety Specifications		
Parameters		
Standards	Designed to meet IEC/UL/EN 62368-1,60950-1	
	EMC - Conducted and radiated emission	EN55032, CLASS A with EMI recommended circuit
	Electrostatic Discharge Immunity	IEC 61000-4-2, Contact ±6kV, Air ±8kV, Criteria A
	RF, Electromagnetic Field Immunity	IEC 61000-4-3, 10V/m, Criteria A
	Electrical Fast Transient/Burst Immunity	IEC 61000-4-4, ±2kV, Criteria A with EFT recommended circuit
	Surge Immunity	IEC 61000-4-5, L-L ±2kV, Criteria A with Surge recommended circuit
	RF, Conducted Disturbance Immunity	IEC 61000-4-6, 10Vr.m.s., Criteria A
	PFMF	IEC 61000-4-8, 50Hz 100A/m, Criteria A

Derating

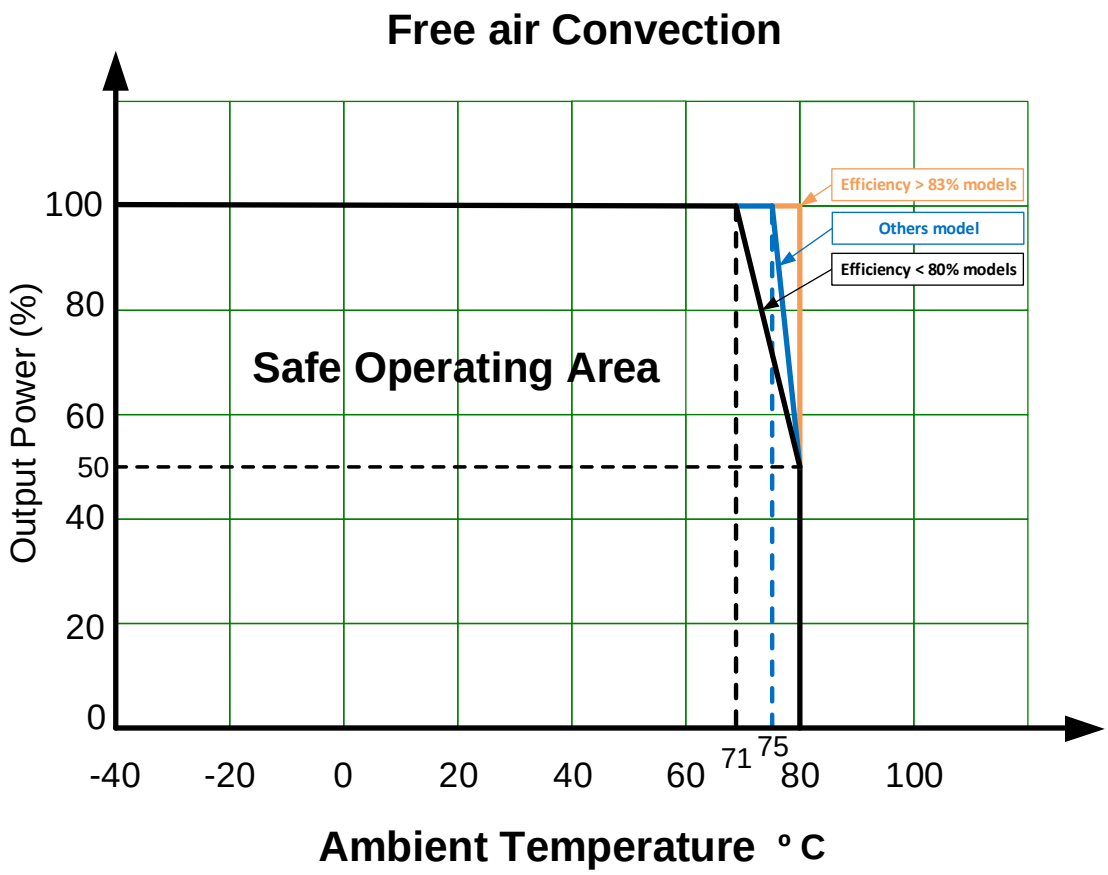

EFT / Surge Recommended Circuit

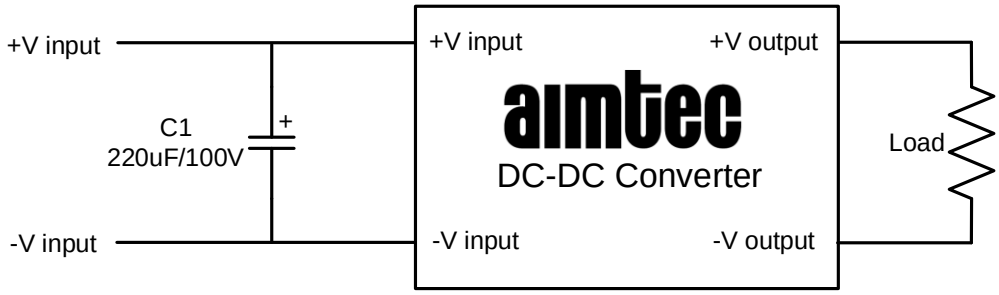

EMI Recommended Circuit

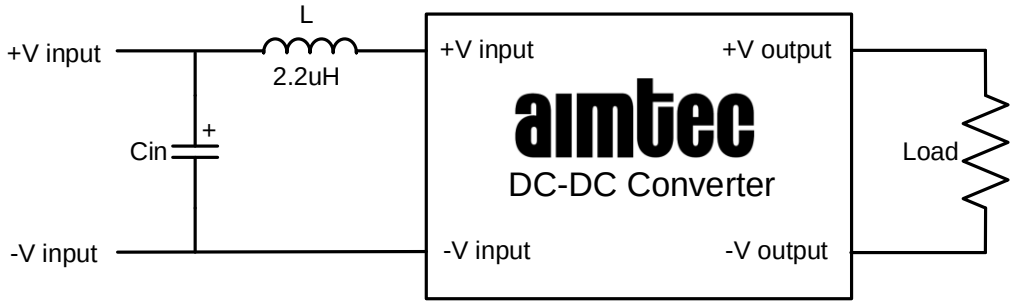

Vin	Cin
12V	1210/10uF/35V
24V	1210/2.2uF/100V
48V	1210/4.7uF/100V

Remote ON/OFF test Circuit

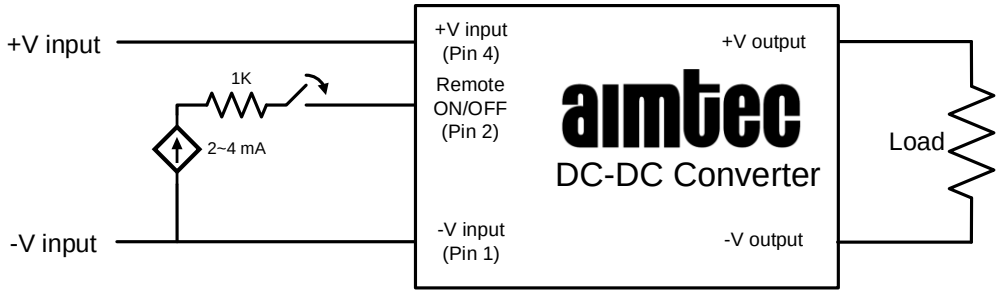

Note: Input current(2~4mA) via 1KΩ to Pin2, converter OFF.
Open or high impedance, converter ON.

Dimensions

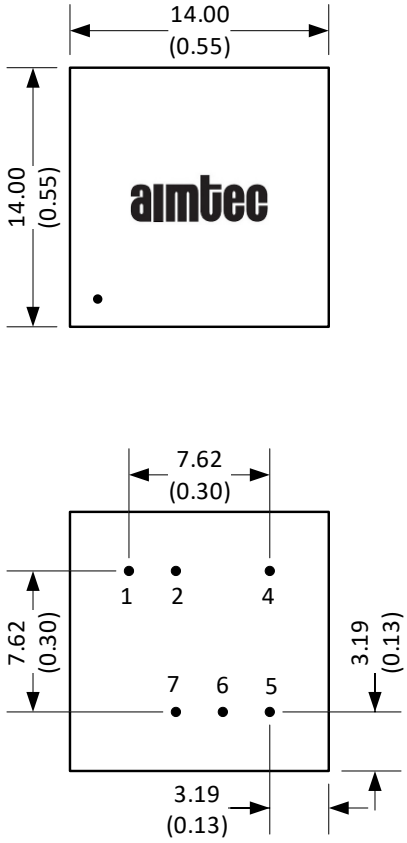

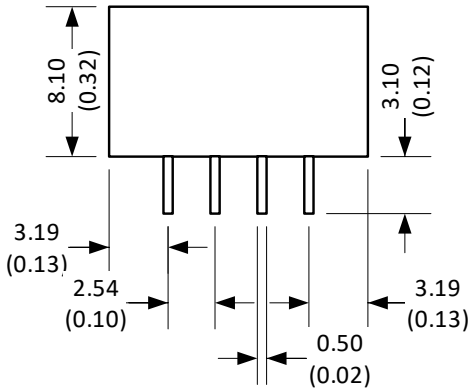

Notes:
All dimensions are typical in millimeters (inches).
Pin diameter tolerance : ±0.05 (±0.002)
Pin pitch and length tolerance : ±0.35 (±0.014)
Stand-off tolerance ±0.50 (±0.02)

Pin Out Specifications		
Pin	Single	Dual
1	-V Input	-V Input
2	Remote ON/OFF	Remote ON/OFF
4	+V Input	+V Input
5	+V Output	+V Output
6	NC	Common
7	-V Output	-V Output

NOTE: 1. Datasheets are updated as needed and as such, specifications are subject to change without notice. Once printed or downloaded, datasheets are no longer controlled by Aimtec; refer to www.aimtec.com for the most current product specifications. **2.** Product labels shown, including safety agency certifications on labels, may vary based on the date manufactured. **3.** Mechanical drawings and specifications are for reference only. **4.** All specifications are measured at an ambient temperature of 25°C, humidity<75%, nominal input voltage and at rated output load unless otherwise specified. **5.** Aimtec may not have conducted destructive testing or chemical analysis on all internal components and chemicals at the time of publishing this document. CAS numbers and other limited information are considered proprietary and may not be available for release. **6.** This product is not designed for use in critical life support systems, equipment used in hazardous environments, nuclear control systems or other such applications which necessitate specific safety and regulatory standards other the ones listed in this datasheet. **7.** Warranty is in accordance with Aimtec's standard Terms of Sale available at www.aimtec.com.