Series AM1LT-NZ

1 Watt | DC-DC Converter

RoHS

FEATURES:

- Low Profile SMD (Surface Mount Device)
- 1.5KVDC Isolation
- Pin-out compatible with DCP01 Series
- Short circuit protection
- Operating Temperature: -40°C to +85°C
- High Power Density
- RoHS Compliant

Models

Single output

Model	Input Voltage (V)	Output Voltage (V)	Output Current max (mA)	Isolation (VDC)	Efficiency (%)
AM1LT-0505S-NZ	4.5-5.5	5	200	1500	74
AM1LT-0509S-NZ	4.5-5.5	9	111	1500	78
AM1LT-0512S-NZ	4.5-5.5	12	83	1500	77
AM1LT-0515S-NZ	4.5-5.5	15	67	1500	76
AM1LT-1205S-NZ	10.8-13.2	5	200	1500	73
AM1LT-1209S-NZ	10.8-13.2	9	111	1500	74
AM1LT-1212S-NZ	10.8-13.2	12	83	1500	76
AM1LT-1215S-NZ	10.8-13.2	15	67	1500	75

NOTE: All specifications in this datasheet are measured at an ambient temperature of 25°C, humidity<75%, nominal input voltage and at rated output load unless otherwise specified.

Input Specifications

Parameters	Nominal	Typical	Maximum	Units
Voltage range	5 12	4.5-5.5 10.8-13.2		VDC

Isolation Specifications

Parameters	Conditions	Typical	Rated	Units
Tested I/O voltage	60 Sec		1500	VDC
Resistance	500Vdc	1000		MOhm

Output Specifications

Parameters	Conditions	Typical	Maximum	Units
Voltage accuracy	See tolerance envelope graph			
Short Circuit protection	Continuous			
Short circuit restart	Auto-Recovery			
Line voltage regulation (Single)	For Vin change of 1%	±1.2		% of Vin
Load voltage regulation (Single)	10% to 100% load	12.8		%
Temperature coefficient	Nominal input,100% full load	0.03		%/°C
Ripple & Noise	20MHz Bandwidth	75		mV p-p
Minimum Load Current		10		% of Max

NOTE: It is not recommended to have the outputs connected in parallel

General Specifications

Parameters	Conditions	Typical	Maximum	Units
Switching frequency	100% load	100		KHz
Operating temperature	-40 to + 85			^{o}C
Storage temperature	-55 to +125			^{o}C
Maximum case temperature			100	^{o}C
Cooling	Free Air Convection			
Humidity			95	% RH
Case material	Epoxy Resin(UL94-V0)			
Weight	1.4			g
Dimensions (L x W x H)	0.77 x 0.42 x 0.20 inches 19.50 x 10.53 x 5.10 mm			
MTBF	>1,500,000 hours (MIL-HDBK -217F, Ground Benign, t=+25°C)			
Maximum Soldering Temperature	1.5mm from case for 10 seconds		260	^{o}C

Pin Out Specifications

Pin	Single
1	+Vin
2	-Vin
5	-Vout
6	+Vout
7	NC
8	NC
14	NC

NC: not connected

Dimensions

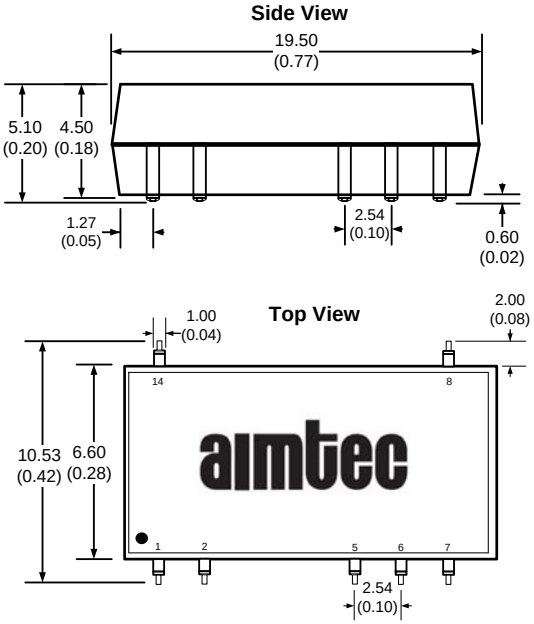

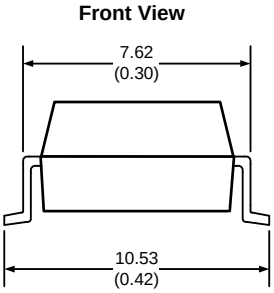

Typical Characteristics

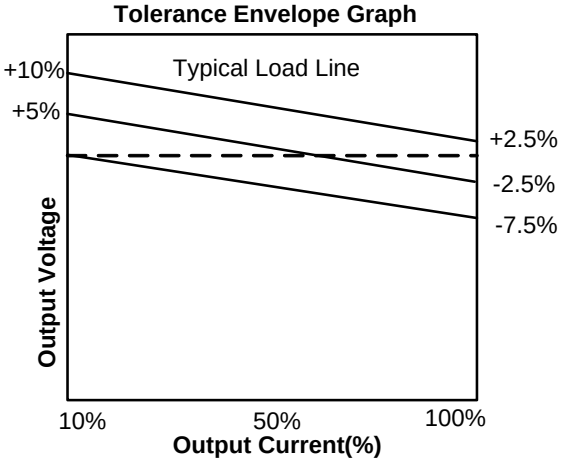

Minimum Load Requirement

In order for this module to operate efficiently and reliably a minimum load of no less than 10% of its maximum needs to be maintained at all times during operation.
NOTE: this converter should never be operated under no load. If it is required to operate the converter with less than 10% load, it is recommended to install a resistor in parallel with the application load to draw additional current from the converter's output to maintain the minimum load condition, or use a converter rated at a lower power.

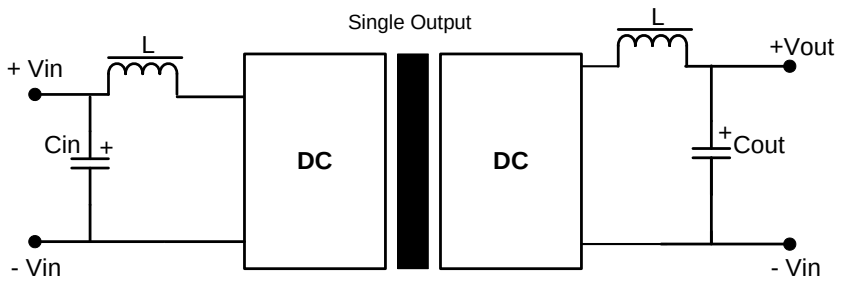

Recommended Filter Circuit

If it is required to decrease the input/output ripple, an "LC" filtering network may be connected to the input and output of the converter, see above.

It should be noted that the inductance and the resonant frequency of the "LC" filtering network should differ from the DC/DC converter switching frequency to avoid mutual interference.

The capacitance of the output filter capacitor must not exceed the values in the table below to avoid startup problems and ensure safe and reliable operation.

It is not recommended to connect any external capacitor in the application field when output loading is less than 0.5 watt.

External Capacitor Tables

Input Capacitor (Cin)

Vin (VDC)	Cin (uF)
5	4.7
12	2.2

Output Capacitor (Cout)

Vout (VDC)	Cout (uF)
5	10
9	4.7
12	2.2
15	1

NOTE: 1. Datasheets are updated as needed and as such, specifications are subject to change without notice. Once printed or downloaded, datasheets are no longer controlled by Aimtec; refer to www.aimtec.com for the most current product specifications. **2.** Product labels shown, including safety agency certifications on labels, may vary based on the date manufactured. **3.** Mechanical drawings and specifications are for reference only. **4.** All specifications are measured at an ambient temperature of 25°C, humidity<75%, nominal input voltage and at rated output load unless otherwise specified. **5.** Aimtec may not have conducted destructive testing or chemical analysis on all internal components and chemicals at the time of publishing this document. CAS numbers and other limited information are considered proprietary and may not be available for release. **6.** This product is not designed for use in critical life support systems, equipment used in hazardous environments, nuclear control systems or other such applications which necessitate specific safety and regulatory standards other the ones listed in this datasheet. **7.** Warranty is in accordance with Aimtec's standard Terms of Sale available at www.aimtec.com.